HONTKO

HTR-6C

HEAVY DUTY ROTARY ENCODER

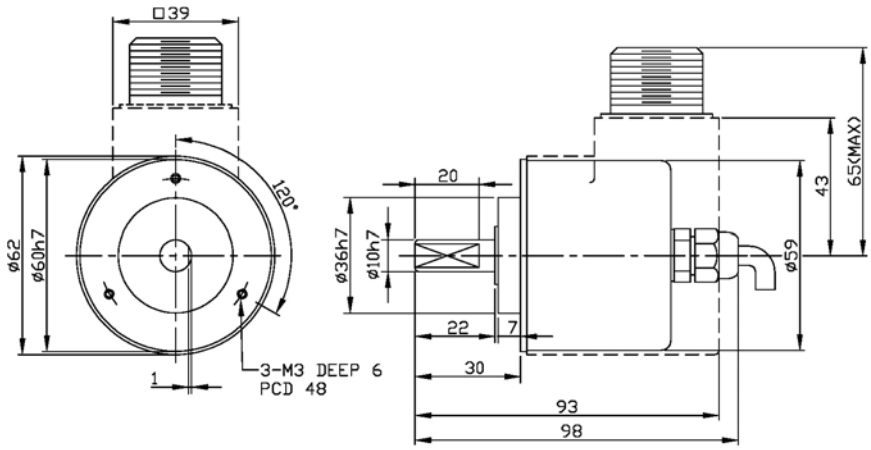

ELECTRICAL SPEC.

Detection System	Incremental 增量型
Output Wave 輸出波形	Square Wave 方波
Standard Number of Pulse Per Revolution 解析	2, 5, 10, 20, 30, 40, 50, 60, 80, 100, 120, 125, 150, 160, 180, 200, 250, 300, 360, 400, 500, 512, 600, 720, 800, 900, 1000, 1024, 1200, 1500, *1800, 2000, *2048, 2500, *3000, *3600, *4000, *5000 * only with AB phase
Output Phase 輸出相	AB phase or ABZ phase
Electronics 電路特性	Voltage 電壓型, Open Collector 電流型, Push Pull 推挽式 or Line Driver 差動式
Power Supply 供應電源	DC 8~26V, DC 5V fixed
Current Consumption 消耗電流	≤ 60 mA
Output Capacity 輸出容量	Sync. Current: 20 mA, Residual Voltage: 0.5V or less
Max. Response 最大響應頻率	10K Hz ~ 100K Hz
Phase Different 相位差	A, B phase different 90°±45° (T/4±T/8), Z phase T±T/2
Wave Form Rise / Fall 波形上下時間	2 μs or less
Polarity 極性保護	Against Reverse Protection (Except Line Driver, Line Driver 除外)

MECHANICAL SPEC.

Shaft Diameter 軸徑	10 mm
Shaft Loading 軸荷重	(10 ~ 1000 PPR) Axial: 5 Kg, Radial: 10 Kg (over 1000 PPR) Axial: 3 Kg, Radial: 6 Kg
Starting Torque (at 25°C) 起動轉矩	260 gf-cm or less
Max. Speed 最大機械容許速度	6,000 rpm
Vibration 震動	10g (10±1,500 Hz)
Shock 衝擊	20g per 11 ms
Cable 電線	Ø5.4, 100 cm long
Weight 重量	≤ 350g

ENVIRONMENTAL SPEC.

Operating Temp. / Humidity 操作溫度/濕度	-10°C ~ 60°C, RH 35% ~ 90% (No Condensation)
Storage Temp. 儲存溫度	-20°C ~ 80°C
Protection 保護等級	IP 64: dust & dripping proof

ORDERING INFORMATION

HTR-6C -

Pulse per Revolution 解析	*Output Phase 輸出相*	*Electronics 電路特性*	*Supply Voltage 供應電源*	*Connection 連接器*
2, 5, 10, 20, 30, 40, 50, 60, 80, 100, 120, 125, 150, 160, 180, 200, 250, 300, 360, 400, 500, 512, 600, 720, 800, 1000, 1024, 1200, 1500, *1800, 2000, *2048, 2500, *3000, *3600, *4000, *5000 P/R *only with AB phase	**2**: AB phase **3**: ABZ phase **3H**: AB+Z high phase	**Blank**: Voltage **C**: Open-Collector **PP**: Push-Pull ***L**: Line Driver 5Vdc ***HL**: Line Driver 8~26Vdc	**Blank**: 8~26Vdc **5V**: 5Vdc fixed	**Blank**: Axial Cable ***R7**: Radial 7 pin ***R10**: Radial 10 pin

HONTKO CO., LTD. ● TEL: +886 2 2226-3867 ● FAX: +886 2 2226-2011 ● E-mail: sales@hontko.com.tw